Exploded view

Explodierte Ansicht | Dessin technique | Rozkres
Vista en despiece ordenado

DNR 200 GS

Exploded view 1/1

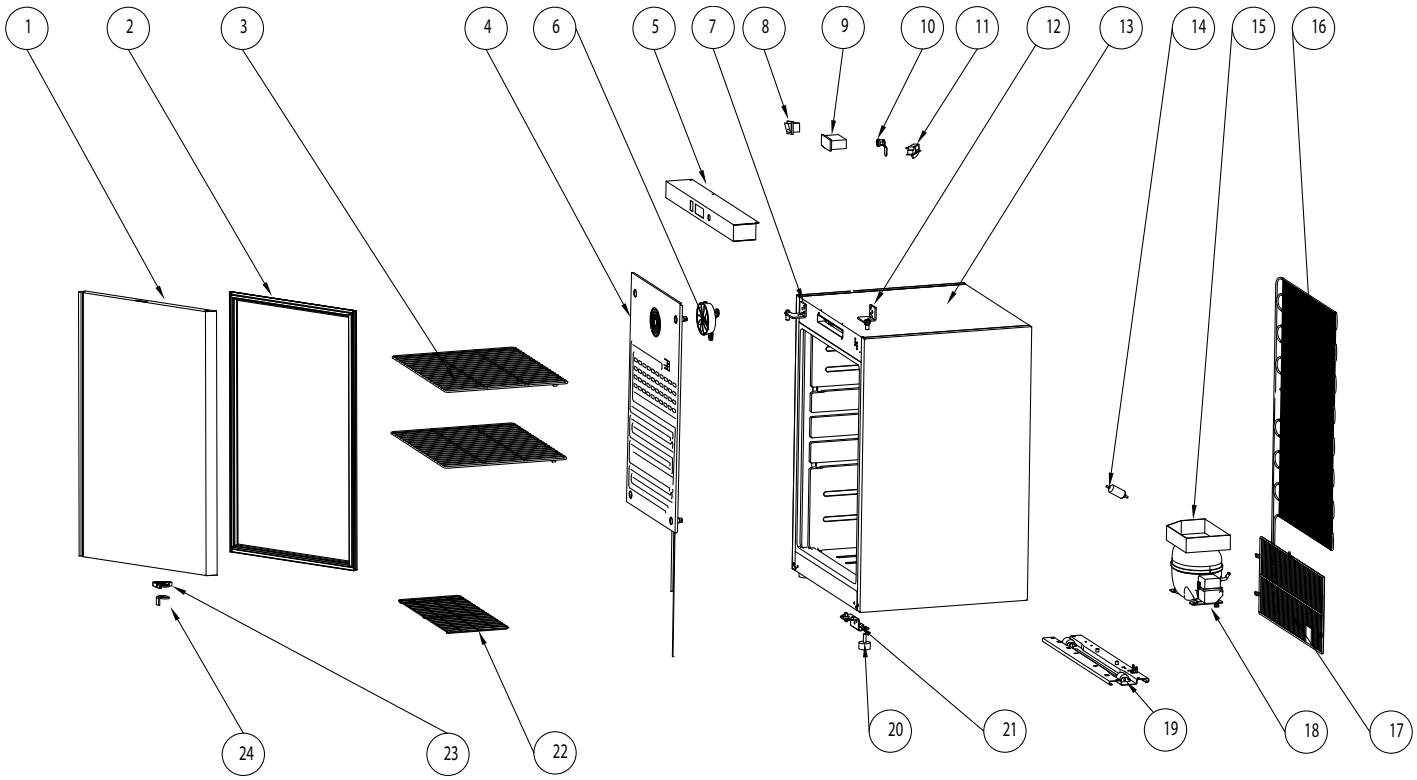

Exploded view

Explodierte Ansicht | Dessin technique | Rozkres
Vista en despiece ordenado

DNR 200 GS

ARTICLE	NUMBER	POSITION
Door	WR20G.01	1
Gasket	WR20.02	2
Shelf	WR20.03	3
Evaporator	WR20.04	4
Front Panel	WR20GS.05	5
Evaporator Fan	WR40.08	6
Left Top Hinge	WR20.13	7
Main Swich	GN1100TN.30	8
Controller	GN1100TN.29	9
Lock	WR40.06	10
Fan Switch	WR40.09	11
Right Top Hinge	WR20.14	12
Body	WR20S.06	13
Filter Drier	WR60.13	14
Water Tray	WR60.12	15
Condensor	WR20.07	16
Back Net	WR20.08	17
Compressor Unit	WR20.09A	18
Compressor Broad	WR20.10	19
Adjustable Feet	S900 STD.38	20
Bottom Hinge	WR40.11	21
Small Shelf	WR20.11	22
Door Closing Stop	WR40.13	23
Door Opening Stop	WR40.12	24